Southwest Microwave, Inc.

Security Systems Division

INTREPID™
SERIES II

RCM II
CM II-N
GCM II-HD
PSM II
RPM II SDK
IPP II SDK

System Controller
Communication Configuration Drawings

August 10, 2018

Table of Contents

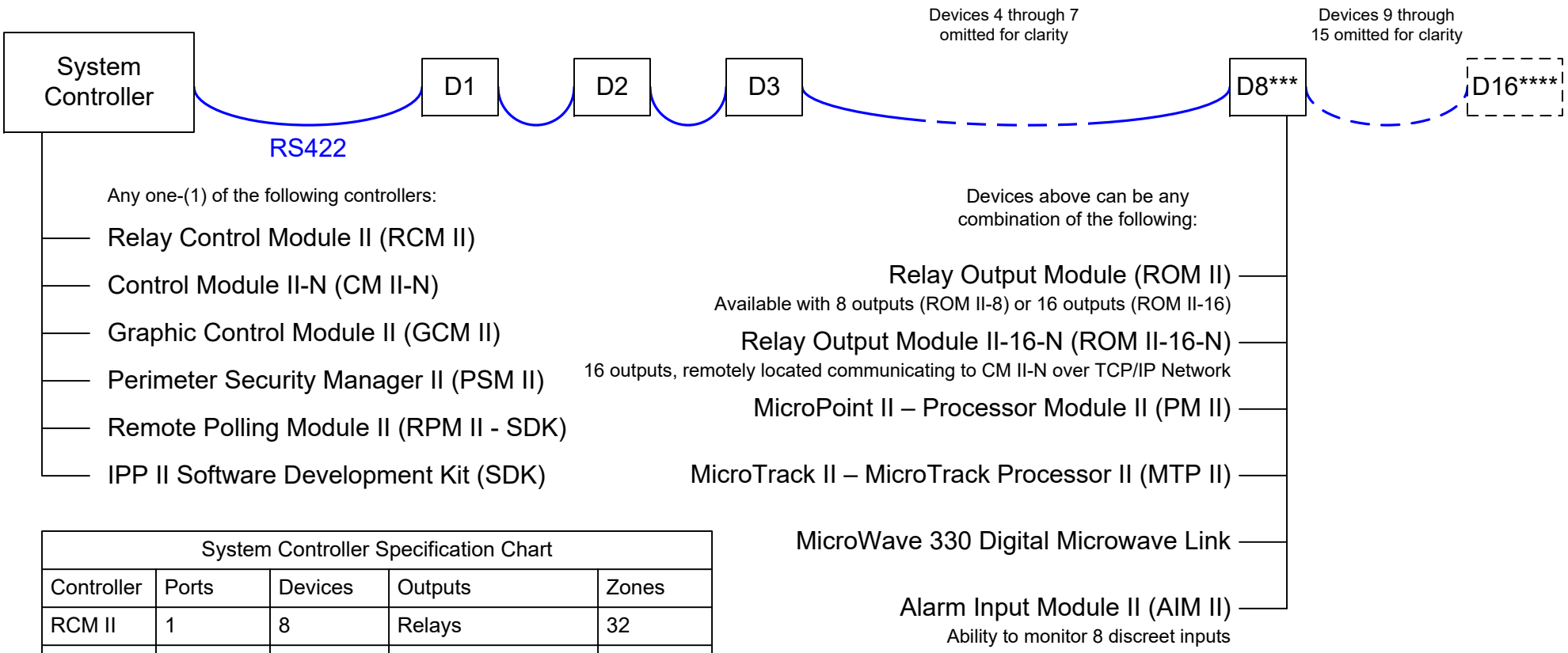

System Controller Specification Chart				
Controller	Ports	Devices	Outputs	Zones
RCM II	1	8	Relays	32
CM II-N	2	16 Local 4 Remote*	Relays	256
GCM II	4	32	Graphic Map Relays ASCII for CCTV	1024
PSM II	99	240	Graphic Map CCTV Driver Relays	Unlimited
RPM II** SDK	2	16	Graphic Map Relays	Unlimited 128**
IPP II SDK	Unlimited	Unlimited	Graphic Map Relays	Unlimited

* ROM II-16-N only.
** Requires RPM II Hardware Module. RPM II provides internal 128 Zone Records for backup alarm annunciation via local form-C dry relay outputs.
*** Eight device string provides a 1-second or less alarm delivery time.
**** Sixteen device string provides a 2-second or less alarm delivery time. Not applicable to the RCM II.

2.1 Non-Fault Tolerant Configuration

- Non-Fault Tolerant communication.
- Maximum Zone Records supported per RCM II = 32
- Maximum devices (PM II, MTP II, MW330, ROM II-8, ROM II-16, AIM II) supported per RCM II = 8
- 1-Second or less alarm delivery time.
- Each PM II provides protection for 1,312 linear feet (400m) of perimeter fence line.
- Each MTP II provides protection for 1,312 linear feet (400m) of perimeter.
- Each MicroWave 330 provides protection for up to 1,500 linear feet (457m) of perimeter.

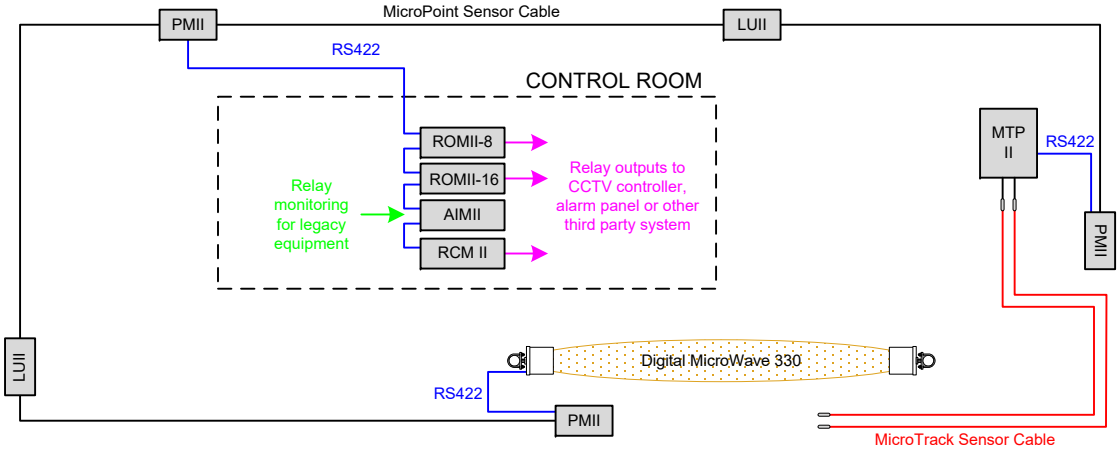

2.2 Star Configuration

- Sensor specifications are the same as those in the Non-Fault Tolerant Configuration but provides the most secure communications path to the RCM II controllers.

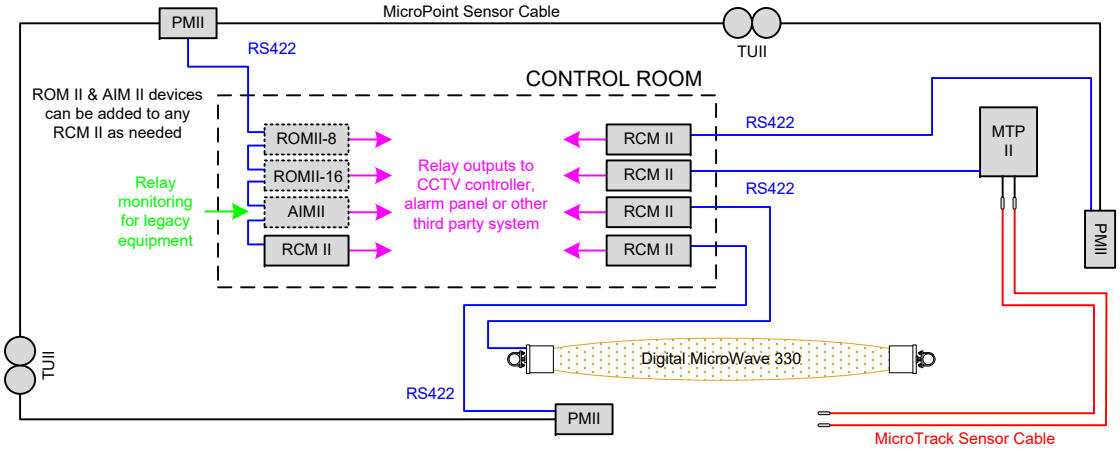

3. Control Module II-N – Typical Communication Configurations

NOTE: For Clarity Some Equipment Needed For A Complete System May Have Been Omitted

August 10, 2018

3.1 Non-Fault Tolerant Configuration

- Non-Fault Tolerant communication.
- Maximum Zone Records supported per CM II-N = 256
- Maximum local devices (PM II, MTP II, MW330, ROM II-8, ROM II-16, AIM II) supported per CM II-N = 16
- Maximum remote devices (ROM II-16-N only) supported per CM II-N = 4
- 1-Second or less alarm delivery time when string of devices (PM II, MTP II, MW330, ROM II-8, ROM II-16, AIM II) does not exceed eight on single com-port.
- 2.5-Second or less alarm delivery time when the maximum number of supported local devices (PM II, MTP II, MW330, ROM II-8, ROM II-16, AIM I) are all connected to a single com-port.
- Each PM II provides protection for 1,312 linear feet (400m) of perimeter fence line.
- Each MTP II provides protection for 1,312 linear feet (400m) of perimeter.
- Each MicroWave 330 provides protection for up to 1,500 linear feet (457m) of perimeter.

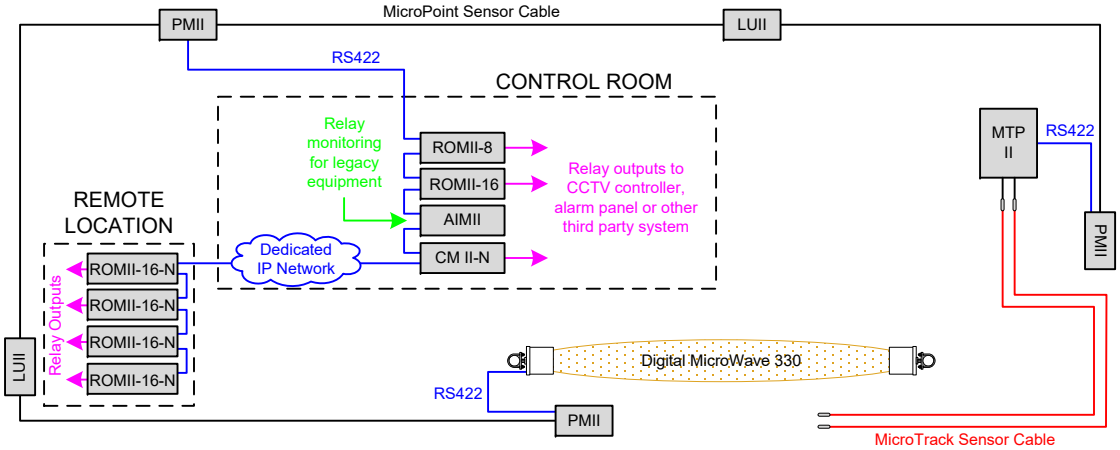

3.2 Fault Tolerant Loop Configuration

- Sensor specifications are the same as those in the Non-Fault Tolerant Configuration but provides Fault Tolerant communications path to the CM II-N controller.

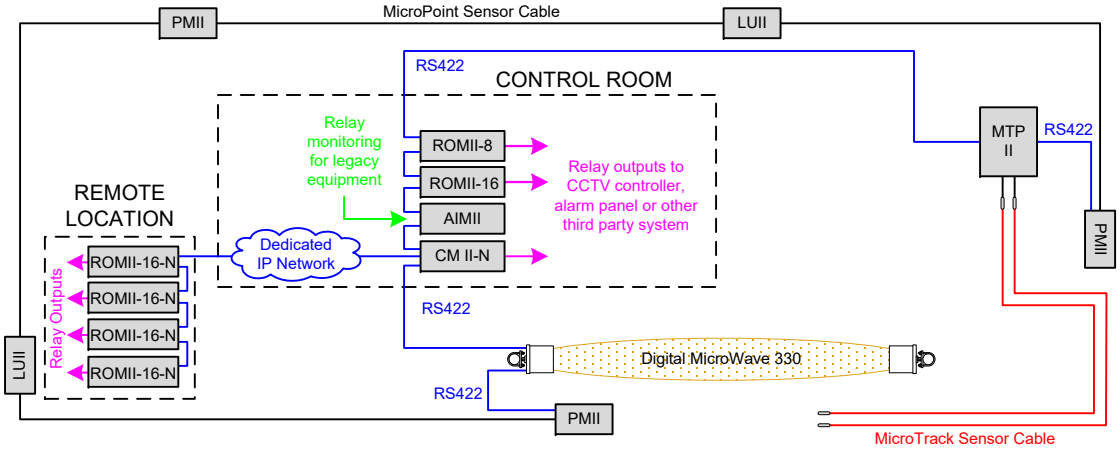

3.3 Star Configuration

- Sensor specifications are the same as those in the Non-Fault Tolerant Configuration but provides the most secure communications path to the CM II-N controllers.

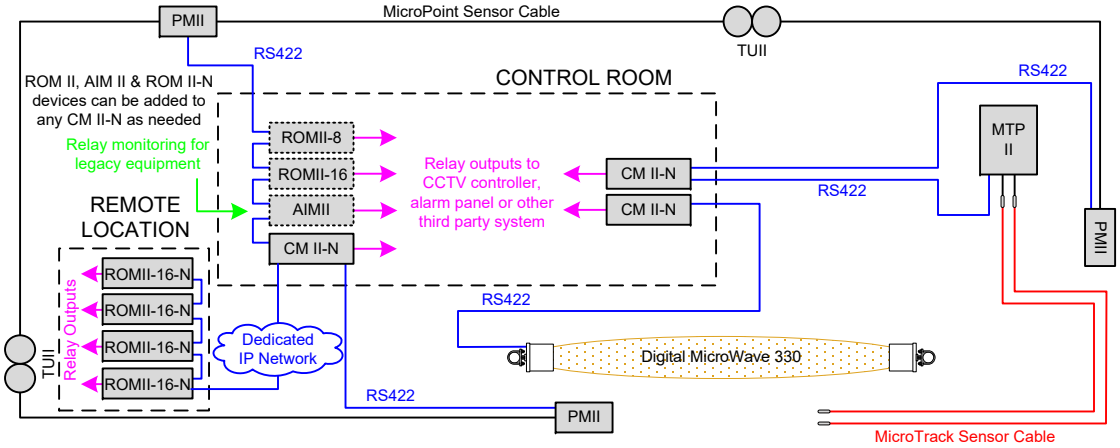

4. Graphic Control Module II-HD – Typical Communication Configurations

NOTE: For Clarity Some Equipment Needed For A Complete System May Have Been Omitted

August 10, 2018

4.1 Non-Fault Tolerant Configuration

- Non-Fault Tolerant communication.
- GCM II-HD provides ASCII output (not shown) for high level CCTV interface.
- Local & remote GCM II-HD and sensor maintenance via on-board Ethernet connection.
- Maximum Zone Records supported per GCM II-HD = 1,024
- Maximum devices (PM II, MTP II, MW330, ROM II-8, ROM II-16, AIM II) supported per GCM II-HD = 32
- 1-Second or less alarm delivery time when string of devices (PM II, MTP II, MW330, ROM II-8, ROM II-16, AIM II) does not exceed eight on single com-port.
- 2.5-Second or less alarm delivery time when string of devices (PM II, MTP II, MW330, ROM II-8, ROM II-16, AIM I) does not exceed sixteen on single com-port.
- Each PM II provides protection for 1,312 linear feet (400m) of perimeter fence line.
- Each MTP II provides protection for 1,312 linear feet (400m) of perimeter.
- Each MicroWave 330 provides protection for up to 1,500 linear feet (457m) of perimeter.

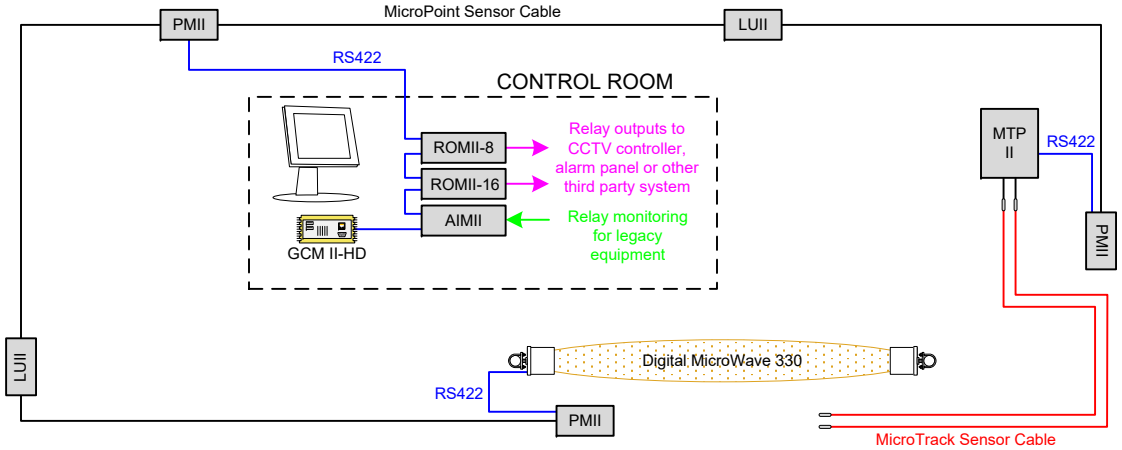

4.2 Fault Tolerant Loop Configuration

- Sensor specifications are the same as those in the Non-Fault Tolerant Configuration but provides Fault Tolerant communications path to the GCM II-HD controller.

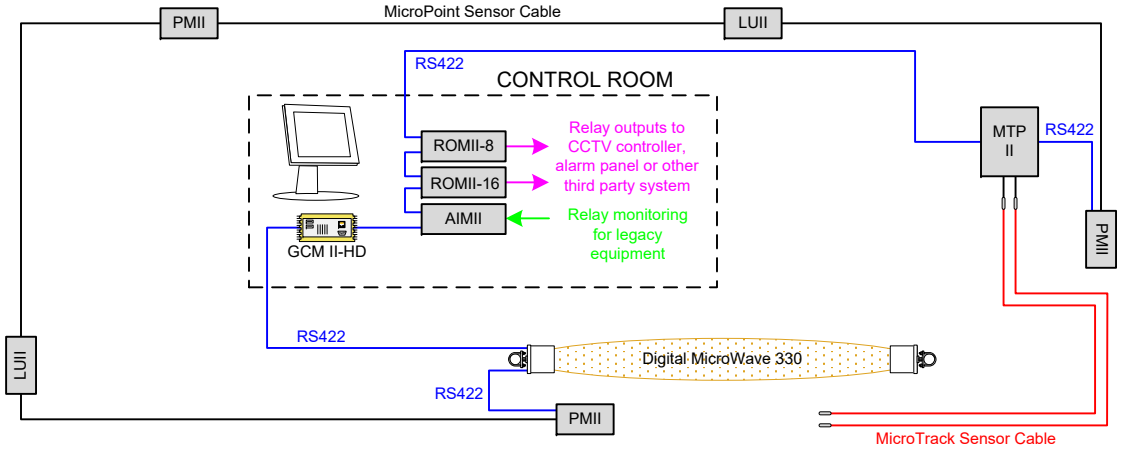

4.3 Star Configuration

- Sensor specifications are the same as those in the Non-Fault Tolerant Configuration but provides the most secure communications path to the GCM II-HD controller.

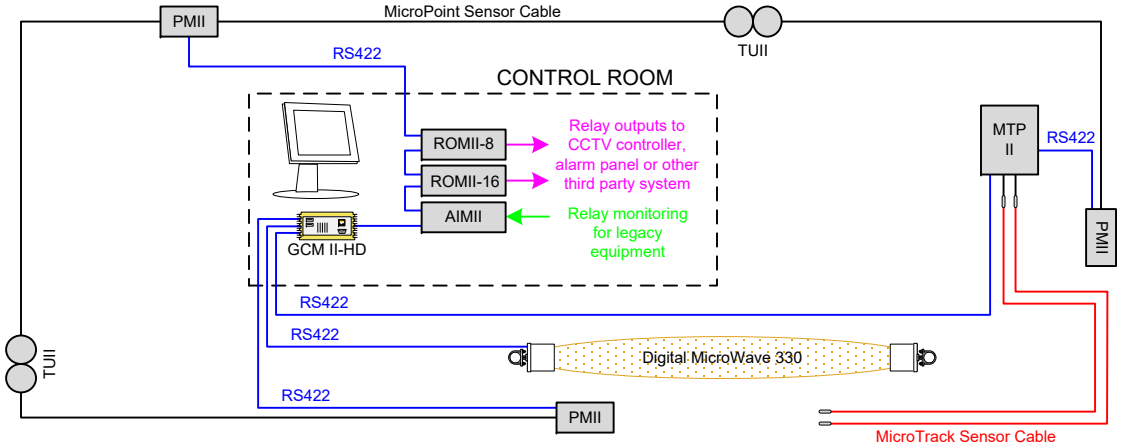

5. Perimeter Security Manager II – Typical Communication Configurations

NOTE: For Clarity Some Equipment Needed For A Complete System May Have Been Omitted

August 10, 2018

5.1 Non-Fault Tolerant Configuration

- Non-Fault Tolerant communication.
- PSM II provides high level serial interface to a wide selection of CCTV matrixes, DVRs & NVRs. Please contact the factory for a list of makes-models and features supported.
- Maximum Zone Records supported = Unlimited
- Maximum devices (PM II, MTP II, MW330, ROM II-8, ROM II-16, AIM II) supported per Remote Polling Module II (RPM II) controller = Sixteen-(16)
- Maximum RPM II connections supported per PSM II = Unlimited
- 1-Second or less alarm delivery time when string of devices (PM II, MTP II, MW330, ROM II-8, ROM II-16, AIM II) does not exceed eight on single com-port.
- 2.5-Second or less alarm delivery time when string of devices (PM II, MTP II, MW330, ROM II-8, ROM II-16, AIM I) does not exceed sixteen on single com-port.
- Each PM II provides protection for 1,312 linear feet (400m) of perimeter fence line.
- Each MTP II provides protection for 1,312 linear feet (400m) of perimeter.
- Each MicroWave 330 protects up to 1,500 linear feet (457m) of perimeter.

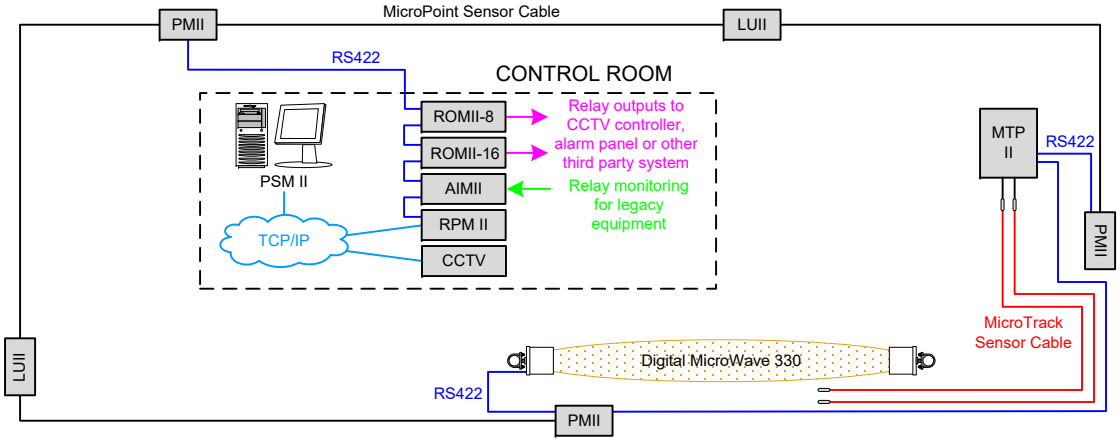

5.2 Fault Tolerant Loop Configuration

- Sensor specifications are the same as those in the Non-Fault Tolerant Configuration but provides the most secure communications path to the RPM II controller.
- A PSM II system supports simultaneous connections to an unlimited quantity of RPM II controllers.

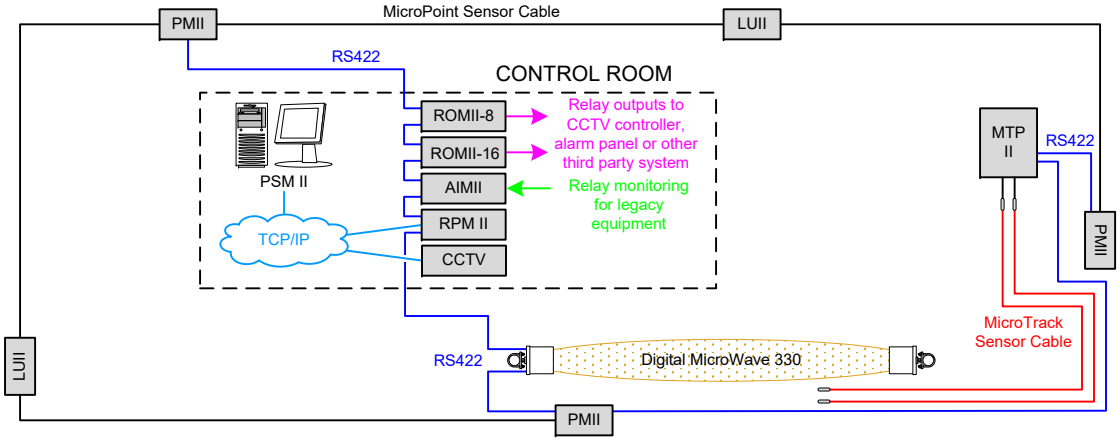

5.3 Multiple Site Application

- Patented **Migrating 3+** technology assures the highest levels of system redundancy and performance. This unique capability distributes control across multiple dedicated workstations so that if one becomes disabled, drivers are seamlessly migrated to a second with no interruption or downtime..
- PSM II PC-to-PC Communication: Secure 256-bit AES Encryption.

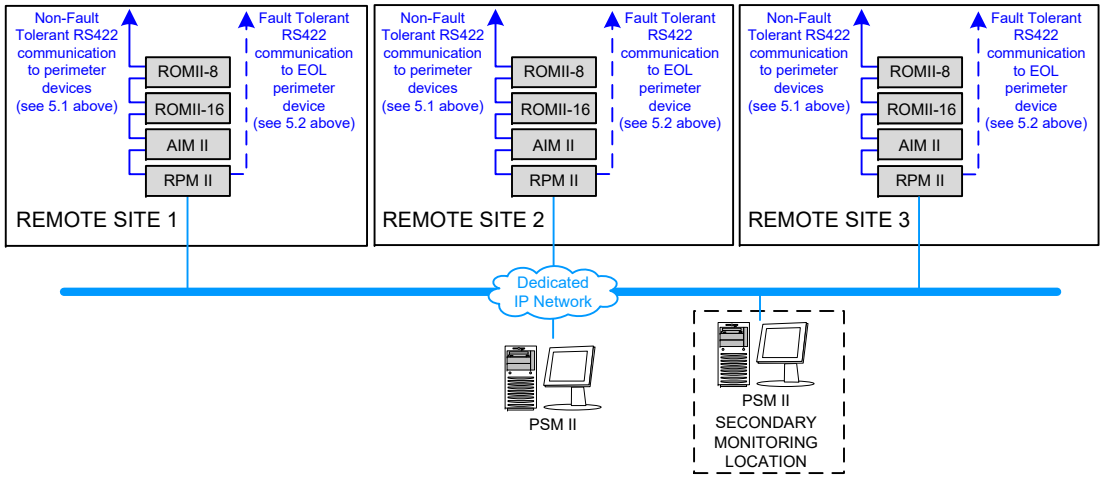

6. Remote Polling Module II/RPM II SDK – Typical Communication Configurations

NOTE: For Clarity Some Equipment Needed For A Complete System May Have Been Omitted

August 10, 2018

6.1 Non-Fault Tolerant Configuration

- Non-Fault Tolerant communication.
- Please refer to software document 57A46792-A01 for information on the required RPM II SDK.
- Maximum Zone Records supported per RPM II = Unlimited using SDK interface, as backup 128 Zone Records reside in each RPM II (annunciated via form-C outputs).
- Maximum devices (PM II, MTP II, MW330, ROM II-8, ROM II-16, AIM II) supported per RPM II = 16
- 1-Second or less alarm delivery time when string of devices (PM II, MTP II, MW330, ROM II-8, ROM II-16, AIM II) does not exceed eight on single com-port.
- 2.5-Second or less alarm delivery time when the maximum number of supported devices (PM II, MTP II, MW330, ROM II-8, ROM II-16, AIM I) are all connected to a single com-port.
- Each PM II provides protection for 1,312 linear feet (400m) of perimeter fence line.
- Each MTP II provides protection for 1,312 linear feet (400m) of perimeter.
- Each MicroWave 330 provides protection for up to 1,500 linear feet (457m) of perimeter.

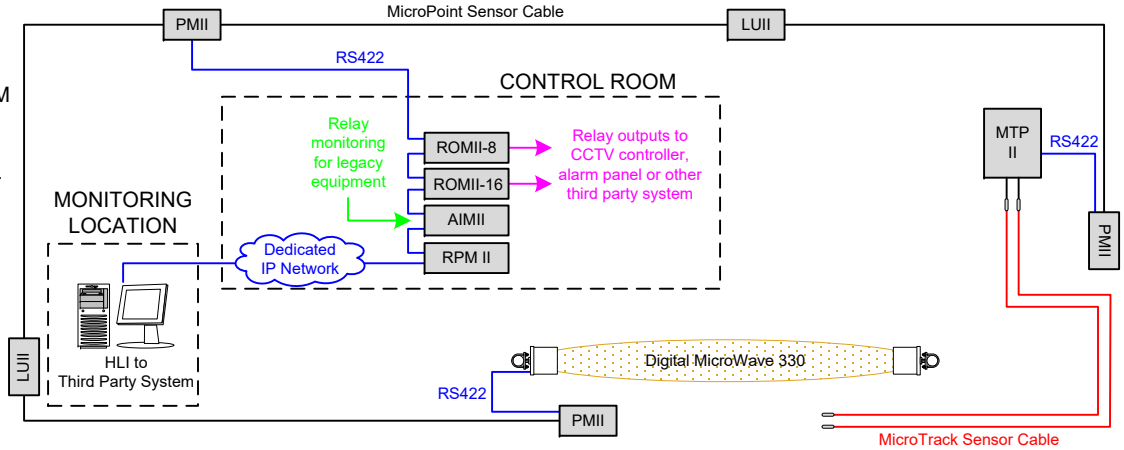

6.2 Fault Tolerant Loop Configuration

- Sensor specifications are the same as those in the Non-Fault Tolerant Configuration but provides most secure Fault Tolerant communications path to the RPM II controller.

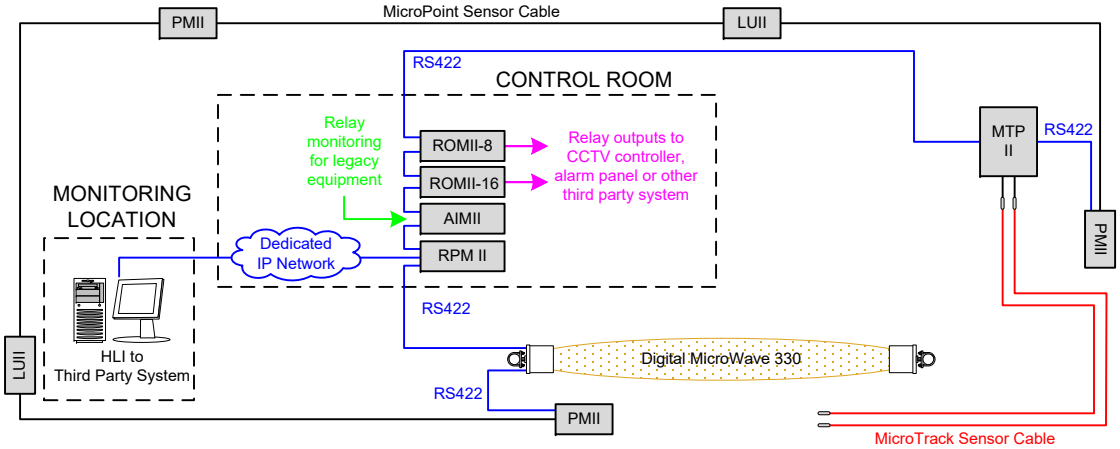

6.3 Multiple Site Application

- There is no limit to the number of Series II sites that can be monitored using the RPM II controller.

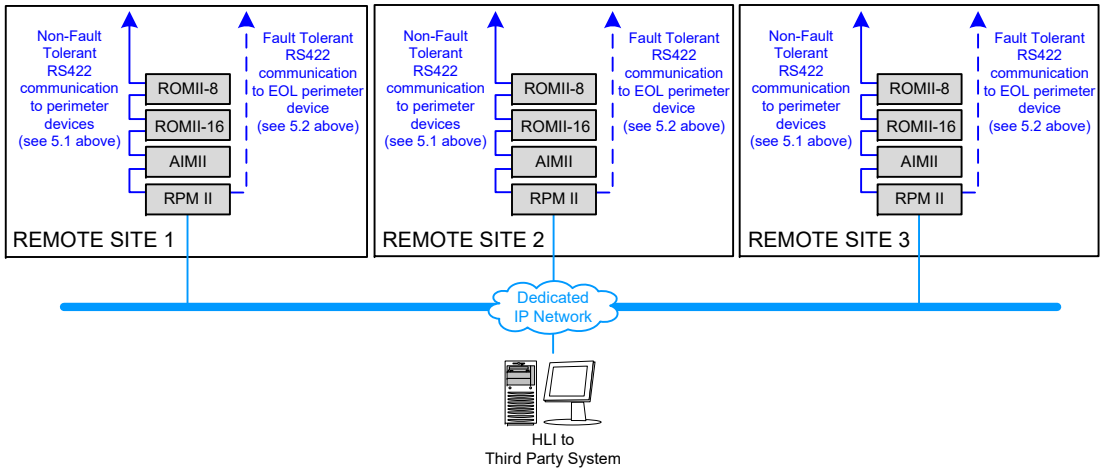

7.1 Non-Fault Tolerant Configuration

- Non-Fault Tolerant communication.
- Please refer to software document 57A46504-A01 for information on the IPP II SDK.
- Maximum Zone Records supported per IPP II SDK connection = Unlimited
- Maximum devices (PM II, MTP II, MW330, ROM II-8, ROM II-16, AIM II) supported per IPP II SDK connection = Unlimited
- 1-Second or less alarm delivery time when string of devices (PM II, MTP II, MW330, ROM II-8, ROM II-16, AIM II) does not exceed eight on single com-port.
- 2.5-Second or less alarm delivery time when string of devices (PM II, MTP II, MW330, ROM II-8, ROM II-16, AIM I) does not exceed sixteen on single com-port.
- Each PM II provides protection for 1,312 linear feet (400m) of perimeter fence line.
- Each MTP II provides protection for 1,312 linear feet (400m) of perimeter.
- Each MicroWave 330 provides protection for up to 1,500 linear feet (457m) of perimeter.

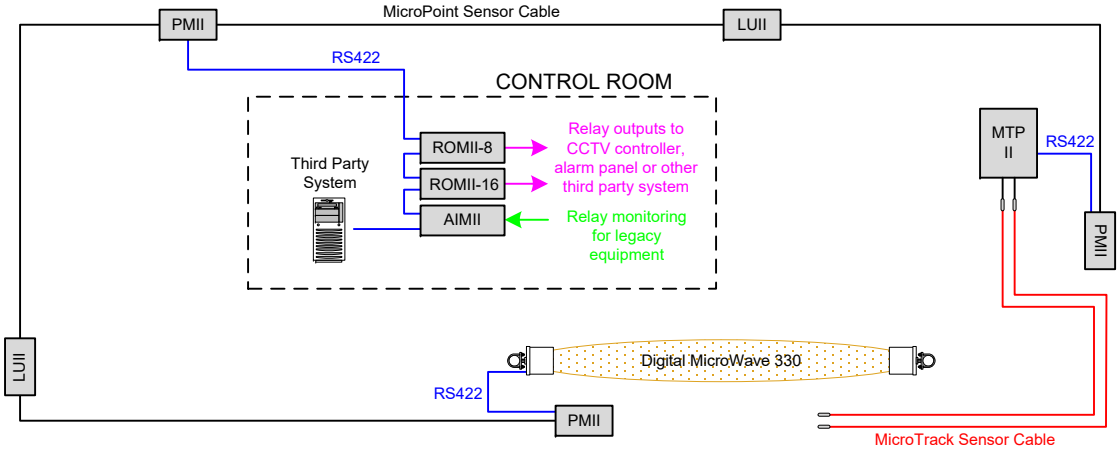

7.2 Fault Tolerant Loop Configuration

- Sensor specifications are the same as those in the Non-Fault Tolerant Configuration but provides Fault Tolerant communications path to the IPP II SDK controller.
- For proper operation of Fault Tolerant Communication, bi-directional device polling must be included in the third parties software development.

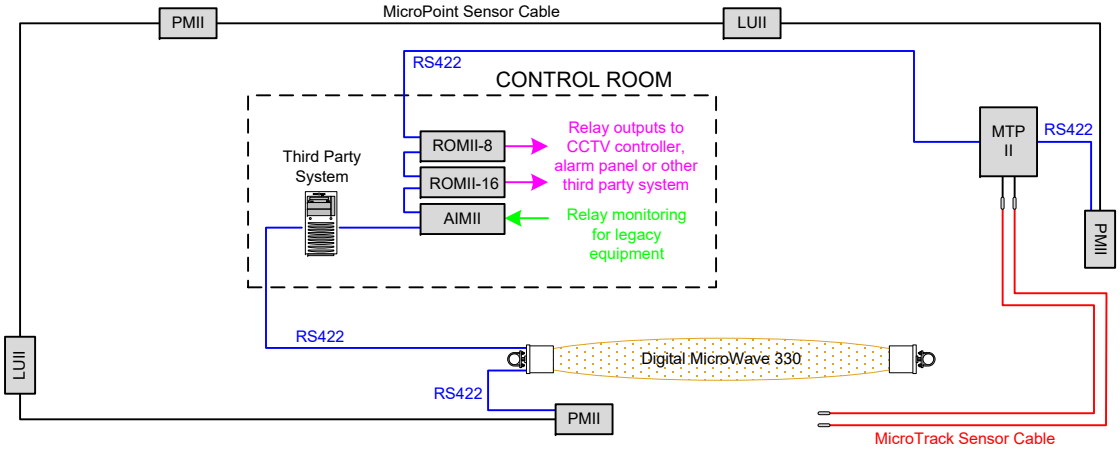

7.3 Star Configuration

- Sensor specifications are the same as those in the Non-Fault Tolerant Configuration but provides the most secure communications path to the GCM II-HD controller.