INTREPID™ Model 316

DIGITAL MICROWAVE LINK

SOUTHWEST MICROWAVE

Newly enhanced with advanced, embedded Digital Signal Processing (DSP) capabilities, INTREPID™ Model 316 is a standalone volumetric perimeter detection sensor for fencelines, open areas, gates, entryways, walls and rooftop applications. Based on Southwest Microwave's field-proven microwave detection technology, proprietary DSP algorithms optimize discrimination between intrusion attempts and environmental disturbances, mitigating risk of site compromise while preventing nuisance alarms.

Designed for maximum protection against sabotage, Model 316 is a high-security detection solution for security-sensitive sites such as nuclear plants, correctional facilities or government / military installations. Heavy-duty components and packaging, integrated radome tamper switches and optional steel enclosures for external wiring and connections prevent physical abuse. Integrated EMI/RFI shielding protects sensor electronics against external electromagnetic or radio frequency interference. The unit's standalone configuration and on-board relay alarm outputs for monitoring eliminate the risk of hacking or other digital compromise faced by networked devices.

Model 316 operates at K-band frequency, achieving superior performance to X-band sensors. Because K-band is 2.5 times higher than X-band, the multipath signal generated by an intruder is more focused, and detection of stealthy intruders is correspondingly better. K-band frequency also limits its susceptibility to outside interference from air/seaport radar or other microwave systems.

Antenna beam width is approximately 3.5 degrees in the horizontal and vertical planes. A true parabolic antenna assures long range operation, superior beam control and predictable Fresnel zones. Advanced receiver design increases detection probability by alarming on partial or complete beam interruption, increase / decrease in signal level or jamming by other transmitters.

Model 316 features 6 crystal-controlled, field-selectable modulation channels with narrow band filtering, preventing interference between sensors. Units can be dual, triple or quad-stacked for ultra-high security applications.

KEY FEATURES

- RANGE: 122 M (400 FT)
- RUGGED CONTRUCTION WITHSTANDS MECHANICAL ABUSE AND CLIMATIC EXTREMES
- EMBEDDED DIGITAL SIGNAL PROCESSING (DSP) FOR HIGH PD / LOW NAR
- SOFTWARE-CONTROLLED SETUP
- LOW POWER CONSUMPTION
- FRESNEL SUPPRESSION ALGORITHMS REDUCE OUTER FIELD DISTURBANCES
- MONITORING VIA ON BOARD FORM-C RELAY ALARM OUTPUTS
- ADVANCED EMI / RFI SHIELDING AND SURGE PROTECTION

INTREPID™ Model 316

DIGITAL MICROWAVE LINK

PRINCIPLES OF OPERATION AND DETECTION

Intrusion detection, using a modulated amplitude sensitive system (not Doppler), takes place within the invisible pattern of microwave energy existing between transmitter and receiver. Changes in signal amplitude at the receiver are directly related to the object's size and density, allowing the sensor to discriminate between objects. Model 316 will alarm on average sized humans walking, running, crawling on hands and knees or prone crawling through the pattern. Local or remote adjustments can provide alarm on smaller, faster or slower targets, depending on the specific application.

INTREPID™ Model 316 employs proprietary digital signal processing algorithms to classify disturbances to the detection field in real time to optimize detection performance. Intruders walking, jumping or crawling through the field are identified and detected, while common environmental disturbances are suppressed, preventing nuisance alarms.

The fully-shielded electronics module and precisely-focused parabolic antenna of Model 316 are mounted on a rugged metal baseplate and covered by a molded ABS radome for all weather operation. Heavy-duty metal pole-mounting bracket with steel swivel mount (sold separately) permits precise setup and provides firm lock against movement.

For detailed information on application, installation and adjustment, consult Model 316 Technical Manual.

TYPICAL MODEL 316 CONFIGURATION DIAGRAM

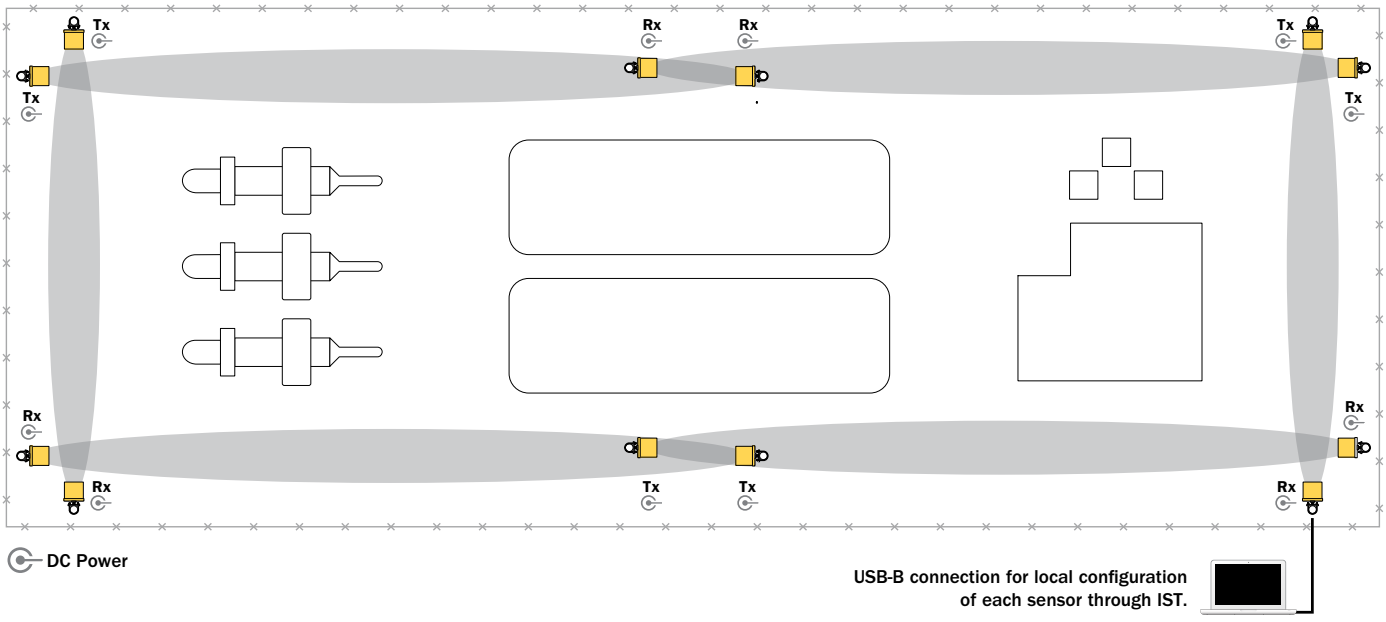

TYPICAL MODEL 316 MOUNTING DIAGRAM

Diagrams Include Optional BX20 Stainless Steel Weatherproof Enclosures and MB65 Heavy Duty Lockable Mounting Brackets.

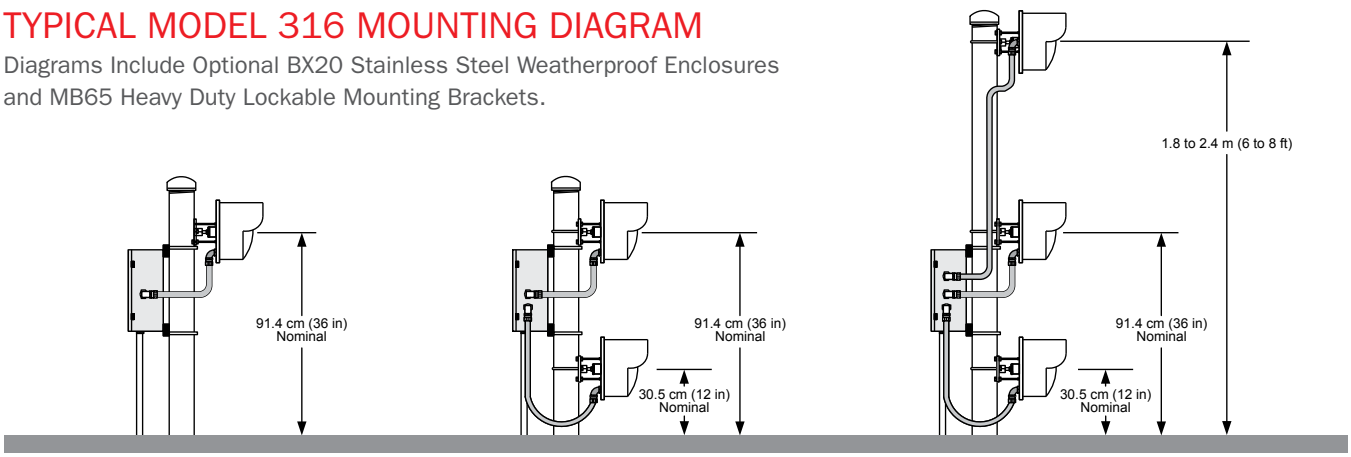

INSTALLATION SERVICE TOOL (IST)

The INTREPID™ Model 316 Installation Service Tool (IST) software graphically controls and monitors sensor status, control parameters and signal strength with laptop convenience at each module via optically isolated, surge-protected USB-B connection. Sensor auto discovery, guided navigation and forward propagation simplify set-up. Unique configuration security provides notification upon changes to device settings, ensuring that only approved changes are implemented. Remote adjustment via RS422 or TCP/IP* connection is available.

Alignment Screen - Alignment Complete

Target Screen - Target Detection - Alarm

*Requires third-party serial device server (Ethernet converter).

PERFORMANCE FEATURES AND BENEFITS

DIGITAL SIGNAL PROCESSING (DSP)

Proprietary embedded DSP algorithms recognize the unique profiles of intruders walking, running or jumping through the detection field as well as enhanced crawl and vehicle detection for superior probability of detection and low nuisance alarm rate.

FRESNEL SUPPRESSION ALGORITHMS

Unique field-selectable digital signal processing algorithms limit outer field (Fresnel zones) disturbance detection, enhancing operation in challenging applications and reducing nuisance alarms.

RF PATH ALARM

Provides an alert when the RF pattern is compromised or distorted by foreign objects moved into the detection field.

RF SHIELDING AND SURGE PROTECTION

Sensor circuit board is 100% shielded against extreme sources of EMI and RFI and protected against lightning induced surges.

PARABOLIC DISH AND ANTENNA DESIGN

Assures long range operation, superior beam control and predictable Fresnel zones for high probability of detection (Pd) and low nuisance alarm rates (NAR).

RUGGED CONSTRUCTION

Heavy-duty industrial components and packaging, including rugged metal base-plate / gland entry and molded ABS radome, are highly resistant to mechanical abuse. 1 mm conformal-coated circuit board enables reliable operation in 100% humidity, corrosive atmospheres or harsh climactic extremes.

INTREPID™ Model 316 SPECIFICATIONS

Equipment Supplied: Model 316 Transmitter, Model 316 Receiver, Installation Service Tool (IST). **Required mounting brackets (2) sold separately.**

Frequency: Square wave modulated frequency of 24.162 GHz (CE).

Output Power: Conforms to EN 300 440-1 (CE).

Range: 20 m to 122 m (66 to 400 ft).

Target Size: 35 kg (77 lbs) human walking, running, hands and knees crawling or jumping. Prone crawling or rolling 35 kg (77 lbs) human, or simulated with a 30.5 cm diameter metal sphere detected at maximum range of 104 m (341 ft) with flat terrain.

Target Velocity: 30 mm/sec to 15 m/sec (0.1 ft/sec to 50 ft/sec).

Probability of Detection: 0.99 minimum.

Automatic Range Adjustment: Link automatically adjusts to slow changes in path loss due to rain, snow, etc. AGC range -54 dB.

Pattern
The detection pattern width is field adjustable from approximately 0.3 to 4.88 m (1 - 16 ft). Pattern height varies in conjunction with pattern width. The pattern width adjustment allows easy adaptation to the final installation site.

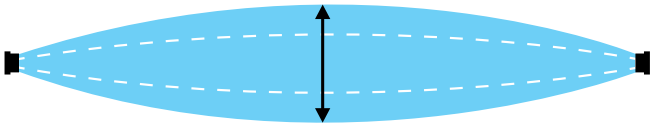

Pattern width adjustable from 0.3 to 4.88 m (1 - 16 ft).

Dimensions

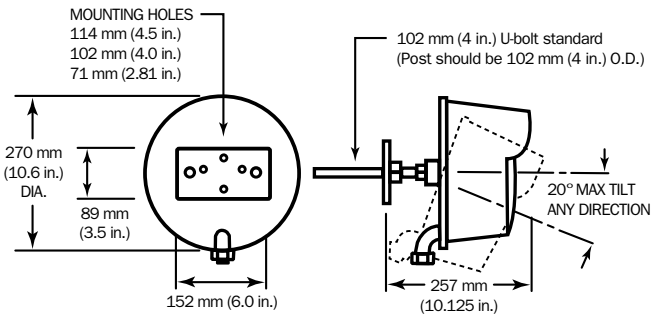

Modulation Channels: 6, field selectable.

Polarization: Vertical (E) or Horizontal (H).

Path Alarm: Generated if RF power at Receiver is changed.

False Alarm Rate: 1/unit/year based on signal to noise ratio.

Operating Environment: -40° C to +66° C (-40° F to +150° F) 0-100% Relative Humidity.

Lightning Protection: Tranzorb discharge devices on all inputs and outputs, including power. ESD Rating of Class 3 (> 16 kV) per Human Body Model (HBM), Peak Power - 600 W @ 1.0 ms.

DC Input (Tx/Rx): 10.5-60 VDC
12 VDC: 105 mA / 115 mA
24 VDC: 60 mA / 65 mA
48 VDC: 35 mA / 35 mA
Minimum startup current: 400mA.

Communications Ports (for IST Configuration Only):
1 x Optically-isolated USB-B, 1 x RS422.

Alarm Output: SPDT-Form C, 2 amps at 28 VDC

Path Alarm Output: SPDT-Form C, 2 amps at 28 VDC

Tamper Switch: SPDT- Form C, 2 amps at 28 VDC

Self Supervision: Alarm on failure and remote test.

Mounting: Locking ball swivel mount. 20° adjustment in any direction.

Remote Test: Applying momentary voltage turns off Transmitter modulation to provide alarm at Receiver.

LED Indicators: Internally located LED's - Power On, and Switch Error at Transmitter. Power On, Channel Fault, Alarm, Jamming Signal, Switch Error and Comm Status at Receiver.

Weight / Shipping Weight: 2.04 kg (4.5 lb) per unit / 8.2 kg (18 lb) total.

Options:
0245483-A01: Enhanced Reflector Antenna (Provides shorter dead zone).
0215483-A01: Radome Latch Kit (Replaces screws).
MB62: Universal Swivel Ball Mounting Bracket.
MB65: Heavy-duty Lockable Mounting Bracket.
BX20, BX35: NEMA 4X (SS) / NEMA 4 Weatherproof Enclosures. Consult factory for specific configuration details.

Ordering Info:
Model 316: Order 316-XXXX

CE INTREPID™ is a trademark of Southwest Microwave, Inc. Specifications subject to change without notice.

SOUTHWEST MICROWAVE

USA (CORPORATE HEADQUARTERS): *Southwest Microwave, Inc., Arizona, USA | Telephone +1 (480) 783-0201*
EUROPEAN OFFICES: *Southwest Microwave Ltd., Worcestershire, UK | Telephone +44 1386 75 15 11*

Rev: 10/2023 | ©2023 Southwest Microwave, Inc. All rights reserved.

www.southwestmicrowave.com